ORIGINAL INSTRUCTIONS

Pressure Washer

RPW170-G



Important!

It is essential that you read the instructions in this manual before assembling, operating, and maintaining the product.

Subject to technical modification.

Safety, performance, and dependability have been given top priority in the design of your pressure washer.

INTENDED USE

The pressure washer is only intended for use outdoors. For safety reasons the product must be adequately controlled by using two-handed operation.

The product is designed for home or domestic use. It is intended to clean machines, vehicles, buildings, floors, tools, facades, terraces, floors, and concrete walkways by removal of stubborn dirt using clean water with or without cleaning detergent.

It should be used in dry and well-illuminated conditions.

Do not use the product for any other purpose.

⚠ WARNING

The product is designed for use with a neutral cleaning agent supplied or recommended by the manufacturer. The use of other cleaning agents or chemicals may adversely affect the safety of the product.

GENERAL SAFETY WARNINGS

⚠ WARNING

Read all safety warnings and all instructions. Failure to follow the warnings and instructions may result in electric shock, fire, and/or serious injury.

⚠ CAUTION

The product must not be used on the drinking water supply without a backflow preventer being installed. Water flowing through a backflow preventer is considered non-drinkable. Always observe the regulations of your local water utility company when connecting the product to a water supply line.

- The product is not intended for use by children or persons with reduced physical, sensory, or mental capabilities, or lack of experience and knowledge. Children should be adequately supervised to ensure they do not play with the product.
- Wear a complete personal protective equipment when operating the product, such as boots, safety gloves, safety helmets with visor, and hearing protection. Use high-impact visors only with liquid splash protection.

⚠ WARNING

Do not use the product when people are within range, unless they wear protective clothing.

- To reduce the risk of injury, keep children and visitors away. All visitors should wear safety glasses and be kept at a safe distance from the work area.
- Inspect the safety devices, such as safety valves, flow switches, and pressure switches to check if they are in good working condition. Make sure all safety devices are operating properly before each use, such as:
  - On/off switch
    - The on/off switch prevents unintentional operation of the product.
  - Trigger handle lock
    - The trigger handle lock locks the trigger and prevents unintentional opening of the high-pressure jet.
  - Total stop switch
    - The total stop switch prevents the permissible working pressure from being exceeded. If the lever on the trigger gun is released, the pressure switch turns off the pump and the high-pressure jet stops. If the lever is pulled, the pump turns on again.
  - Overload protection
    - A thermal sensor protects the product from overloading. The product will automatically shut the power down while overheating.
- Do not use the product if the important parts are damaged, such as safety devices, high-pressure hoses, or trigger gun.
- Exercise caution when opening the trigger. Hold the handle firmly with two hands to avoid injury when the handle kicks back.

⚠ WARNING

During use of high pressure cleaners, aerosols may be formed. Inhalation of aerosols can be hazardous to health.

⚠ WARNING

Depending on the application, shielded nozzles can be used for high-pressure cleaning, which will reduce the emission of hydrous aerosols. However, not all applications allow the use of such a device. If shielded nozzles are not applicable for the protection against aerosols, a respiratory mask of class FFP 2 or equivalent may be needed, depending on the cleaning environment.

- Always stop the product when you leave it unattended.
- High-pressure jet is dangerous if misused. Do not direct the jet to people, live electrical equipment, or the product itself.
- To avoid a risk of explosion, do not spray flammable liquids.
- Do not direct the jet against yourself or others in order to clean clothes or footwear.
- Do not use the product to clean electronic devices, clothes, or footwear.
- High-pressure hoses, fittings, and couplings are important for the safety of the product. Use only hoses, fittings, and couplings recommended by the manufacturer.

ELECTRICAL SAFETY WARNINGS

- The plug must match the outlet. Never modify the plug in any way. Unmodified plugs and matching outlets reduces the risk of electric shock.
- Do not use the product if the power cord or other important parts, such as safety devices, are damaged.
- Only use a weather proof extension cord. Check the extension cord before every use for damage. Always uncoil the extension cord during the use because coiled cords can overheat. Damaged extension cords should not be repaired, they should be replaced with an equivalent type.
- Keep the power cord away from heat, oil, and sharp edges.
- Never touch the mains plug and the socket with wet hands.
- Inadequate extension cords can be dangerous. If an extension cord is used, it shall be suitable for outdoor use, and the connection has to be kept dry and off the ground. Use a cord wheel to keep the socket at least 60 mm above the ground.
- Electric power shall be supplied with a residue current device (RCD) with a tripping current of not more than 30mA.

ADDITIONAL SAFETY WARNINGS

- Some regions have regulations that restrict the use of the product in some operations. Check with your local authority for advice.
- Before each use, check for damage. A damaged high-pressure hose must be replaced immediately. Ensure all connections, such as high-pressure hose and nozzle, are secure. Unwind the hose properly so they may not get twisted or kinked.
- Do not allow children or untrained individuals to use the product.
- Before starting any cleaning operation, close doors and windows. Clear the area to be cleaned of debris, toys, outdoor furniture, or other objects that could create a hazard.
- Never pick up or carry the product while the motor is running.
- Do not use the product in temperatures below 0°C.
- Do not use acids, alkalines, solvents, flammable material, bleaches, or industrial grade solutions in the product. These products can cause physical injuries to the operator and irreversible damage to the product.
- Always operate the product on a level surface.

⚠ WARNING

High-pressure jet can be dangerous if subject to misuse. The jet must not be directed to people, animals, electrical devices, or the product itself.

- Hold the handle securely with both hands. Expect the handle to move when the trigger is pulled due to reaction forces. Failure to do so could cause loss of control and injury to yourself and others.
- Make sure the air in the hose and pump is released before you turn on the product. To remove the air in the hose and pump, connect the water supply to the pump using a garden hose, connect the trigger handle to pump using the high-pressure hose, disengage the trigger handle lock, and press the trigger until there is a steady flow.
- Exercise caution to avoid slipping or falling.
- Keep firm footing and balance. Do not overreach. Overreaching can result in loss of balance.
- Only use accessories that are recommended by the manufacturer. The use of improper accessories may cause injury.
- Never leave the product running unattended. Turn the product off. Do not leave the product until it comes to a complete stop.
- Be familiar with the controls. Know how to stop the product and bleed the pressure quickly.
- Stay alert and exercise control. Watch what you are doing and use common sense.
- Do not use the product when you are tired, ill, or under the influence of drugs, alcohol, or medication. A moment of inattention while operating the product may result in serious personal injury.
- Do not use the product if the switch does not turn it on and off. Any product that cannot be controlled with a switch is dangerous and must be repaired.
- Keep a minimum distance of 30 cm when cleaning vehicles. The high-pressure jet may damage or burst vehicle tires and/or tire valves.
- Use a garden hose with a maximum length of 15 m and minimum diameter of 18 mm (3/4 in.)

⚠ CAUTION

Water blasting any asbestos-containing material, including an asbestos roof, is illegal.

OVERLOAD PROTECTION

A thermal sensor protects the product from overloading. The product will automatically shut the power down while overheating. To resume operation, disconnect the product from the power supply, wait for about 15 min to cool down, and reconnect the product to the power supply.

TRANSPORTATION AND STORAGE

⚠ CAUTION

Mind the weight of the product when selecting the storage location and during transportation to prevent accidents or injuries.

- Stop the product, disconnect from the power supply, and allow the product to cool down. Disconnect the product from the water supply before storing or transporting. Never place the product in any position other than upright.
- Remove water from all hoses and the pump, and empty the detergent tank before storing the product.
- Clean all foreign materials from the product. Store it in a cool, frost-free, dry, and well-ventilated place that is inaccessible to children. Keep away from corrosive agents such as garden chemicals and de-icing salts. Do not store outdoors.
- For transportation in a vehicle, secure the product against movement or falling to prevent injury to persons or damage to the product.

MAINTENANCE

⚠ WARNING

Use only original manufacturer's replacement parts, accessories, and attachments. Failure to do so can cause possible injury, contribute to poor performance, and may void your warranty.

⚠ WARNING

Servicing requires extreme care and knowledge and should be performed only by a qualified service technician. For service, bring the product to an authorised service centre. When servicing, use only original replacement parts.

- Stop the product, disconnect from the power supply, and allow the product to cool down. Disconnect the product from the water supply before:
  - cleaning the product
  - maintaining the product
  - replacing spare parts
- You may make adjustments or repairs described in this manual. For other repairs, contact an authorised service centre.
- Regularly inspect and maintain the high pressure cleaner for safe operation. Ryobi recommends inspecting the product every 6 months.
- Check all nuts, bolts, and screws at frequent intervals for proper tightness to ensure the product is in safe working condition. Any part that is damaged should be properly repaired or replaced by an authorised service centre.

RESIDUAL RISKS

Even when the product is used as prescribed, it is still impossible to completely eliminate certain residual risk factors. The following hazards may arise in use and the operator should pay special attention to avoid the following:

- Injury caused by the high-pressure jet
  - Avoid pointing the high-pressure jet to people, animals, and to yourself.
- Injury caused by kickback
  - Always hold the handle or the trigger wand firmly with your two hands.
- Injury caused by inhalation of aerosols
  - Wear appropriate respiratory mask.
- Injury caused by exposure to noise
  - Wear ear protection.

RISK REDUCTION

It has been reported that vibrations from handheld tools may contribute to a condition called Raynaud's Syndrome. Symptoms may include tingling, numbness, and blanching of the fingers, usually apparent upon exposure to cold. Hereditary factors, exposure to cold and dampness, diet, smoking, and work practices are all thought to contribute to the development of these symptoms. There are measures that can be taken by the operator to possibly reduce the effects of vibration:

- Keep your body warm in cold weather. When operating the product, wear gloves to keep the hands and wrists warm.
- After each period of operation, exercise to increase blood circulation.
- Take frequent work breaks. Limit the amount of exposure per day.

If you experience any of the symptoms of this condition, immediately discontinue use and see your physician.

⚠ WARNING

Injuries may be caused, or aggravated, by prolonged use of a tool. When using any tool for prolonged periods, ensure you take regular breaks.

SYMBOLS ON THE PRODUCT


Warning


To reduce the risk of injury, user must read and understand operator's manual before using this product.


Wear eye and hearing protection.


Remove plug from the mains immediately if cable is damaged or cut.


Electrical shock hazard


The product is not suitable for connection to the drinking water mains without backflow preventer.



Never point the spray wand to people, animals, the body of the product, power supply, or any electric appliances.



Burst hazard



Regulatory Compliance Mark (RCM). Product meets applicable regulatory requirements.



A-weighted sound pressure level at the operator position is 82 dB.
The guaranteed sound power level shown on this label is 99 dB.



Waste electrical products should not be disposed of with household waste. Please recycle where facilities exist. Check with your local authority or retailer for recycling advice.

SYMBOLS IN THIS MANUAL



Wear non-slip, heavy-duty, protective gloves when handling.



Parts or accessories sold separately



Note



Warning

The following signal words and meanings are intended to explain the levels of risk associated with this product.

⚠ DANGER

Indicates an imminently hazardous situation, which, if not avoided, will result in death or serious injury.

⚠ WARNING

Indicates a potentially hazardous situation, which, if not avoided, could result in death or serious injury.

⚠ CAUTION

Indicates a potentially hazardous situation, which, if not avoided, may result in minor or moderate injury.

CAUTION

Without safety alert symbol

Indicates a situation that may result in property damage.

TROUBLESHOOTING

Problem	Possible causes	Solution
Machine refuses to start	Machine not plugged in	Plug in machine.
	Defective socket	Try another socket.
	Defective extension cable	Try without the extension cable.
Fluctuating pressure	Pump sucking air	Check that hoses and connections are air tight.
	Valves dirty, worn out or stuck	Clean and replace or refer to local distributor .
	Pump seals worn out	Clean and replace or refer to local distributor.
Motor buzzes	Low voltage or low temperature	Activate the trigger of the spay handle.
Machine stops	Incorrect mains voltage	Check that the mains voltage corresponds to specification on the model tag.
	Thermal sensor activated	Leave the washer for 15 minutes to cool down.
	Nozzle partially blocked	Clean the nozzle.
Machine pulsating	Air in inlet hose/pump	Allow the product to run with open trigger until regular working pressure resumes.
	Inadequate supply of mains water	Check that the water supply corresponds to the specifications required (see model tag). Avoid using long, thin hoses.
	Nozzle partially blocked	Clean the nozzle.
	Water filter blocked	Clean the filter.
	Hose kinked	Straighten out hose.
Machine often starts and stops by itself	Pump/spray handle is leaking	Wait for the pump, hoses, or other accessory to thaw.
Machine starts, but no water comes out	Pump/hoses or accessory frozen	Wait for pump/hoses or accessory to thaw.
	No water supply	Connect the water inlet port to a water supply.
	Water filter blocked	Clean the filter.
	Nozzle blocked	Clean the nozzle.

UNPACKING

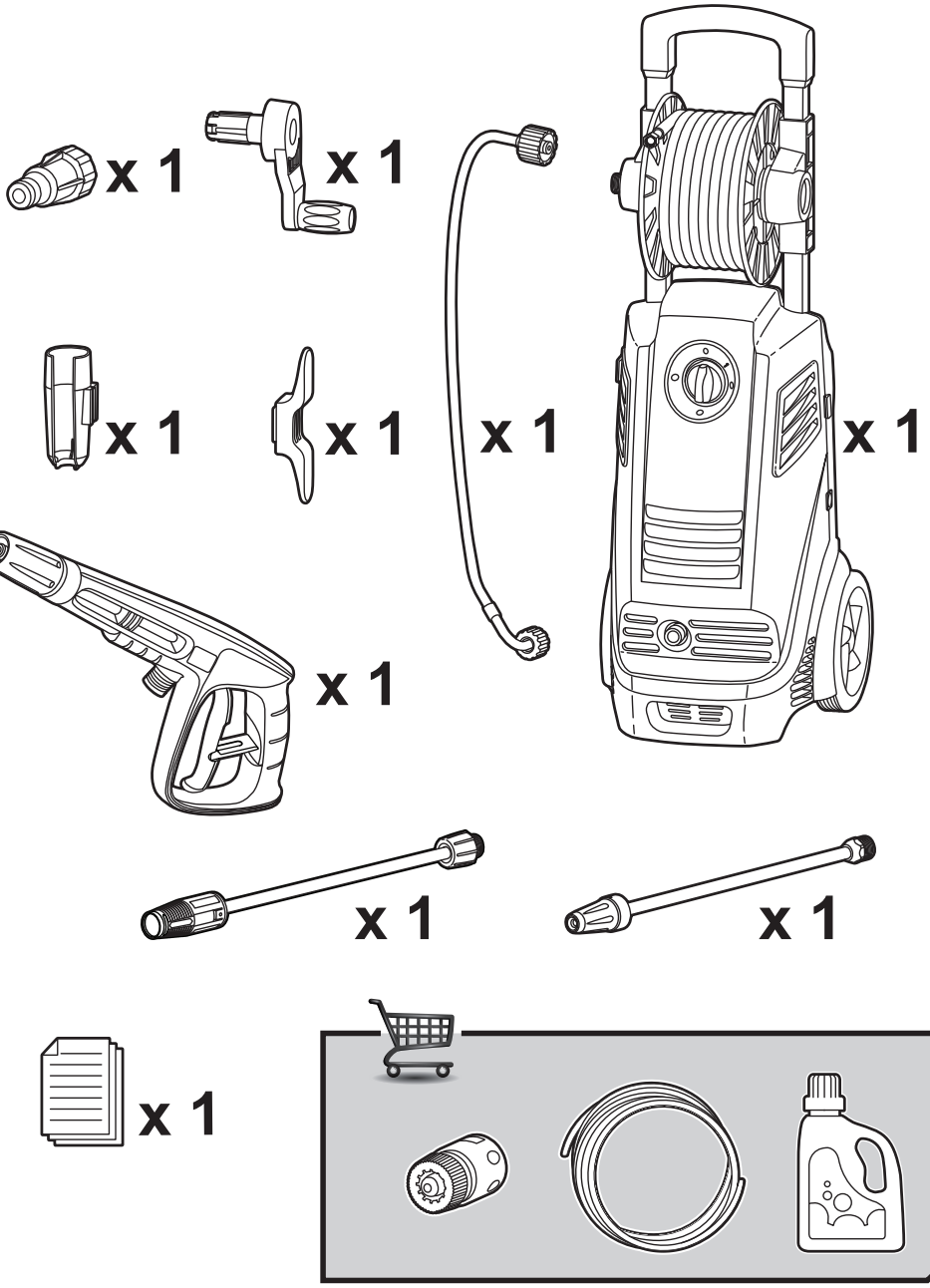

KNOW YOUR PRODUCT

1. Trigger gun lock
2. Trigger
3. Hose reel handle
4. Power cord holder
5. Power cord
6. Soap tank
7. Water inlet port
8. Water inlet coupler with filter
9. Turbo nozzle wand
10. Turbo nozzle
11. Spray nozzle
12. Spray nozzle wand
13. On/off switch
14. Trigger handle holder
15. High pressure hose
16. High pressure hose reel
17. Handle

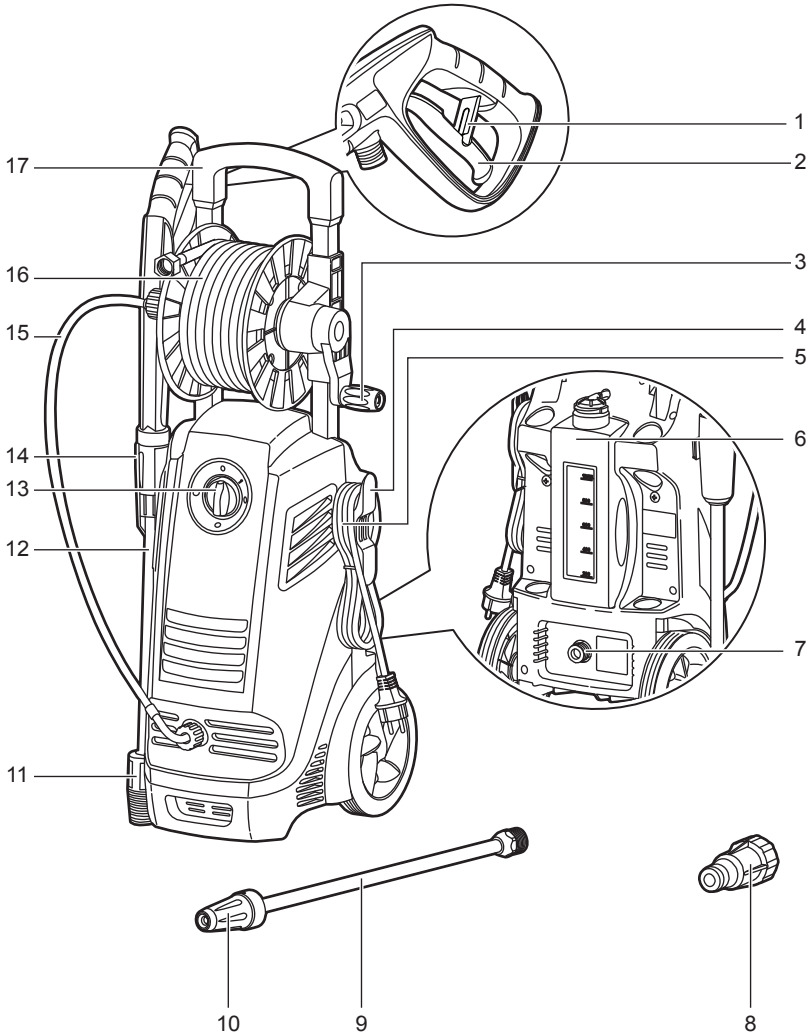

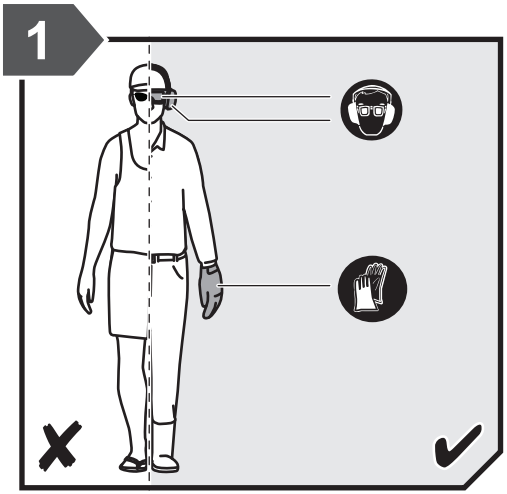
1

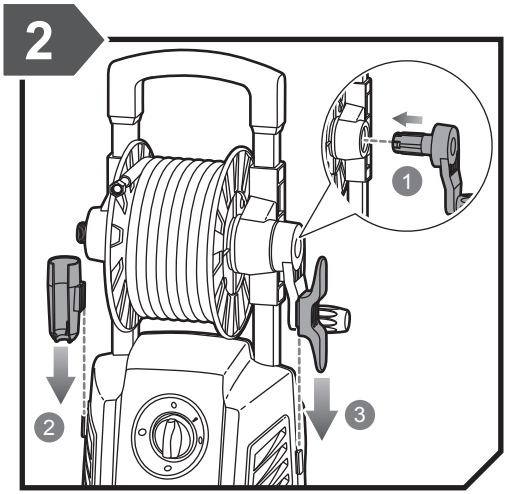
2
1
2
3

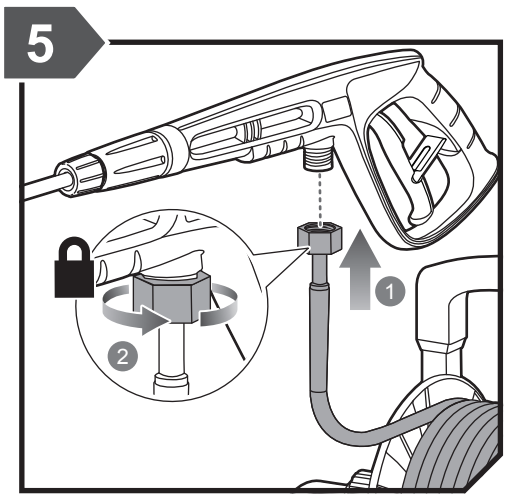
5
1
2

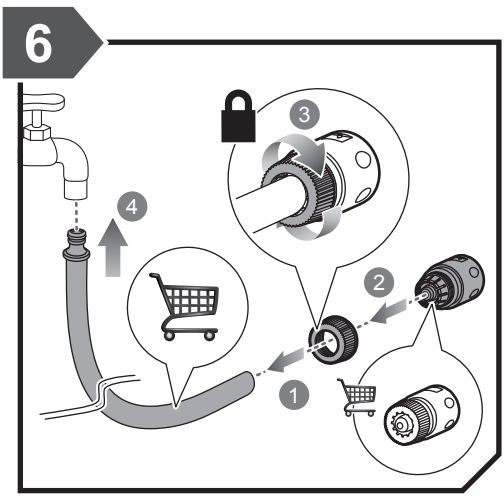
6
3
4
2
1

GETTING STARTED

3

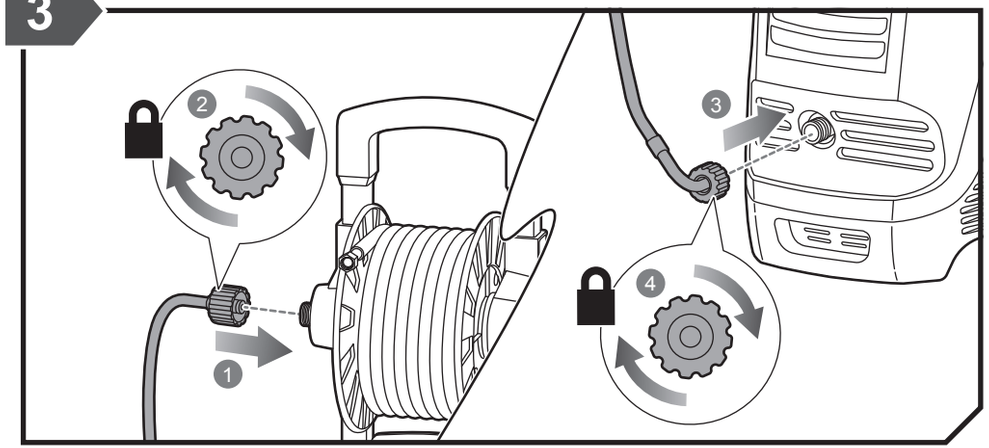

4

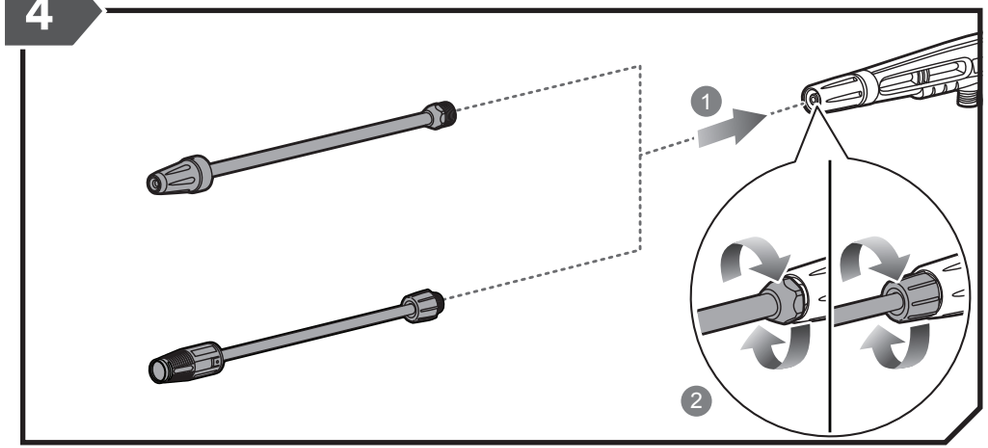

7

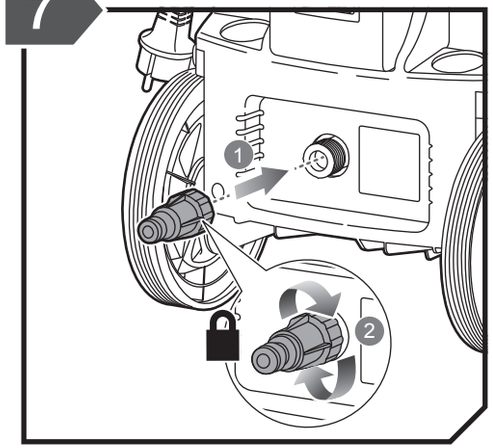

8

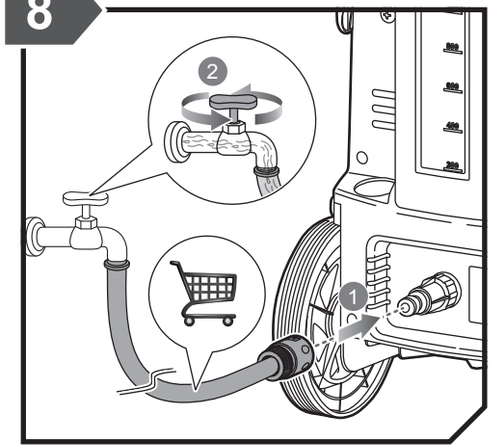

9

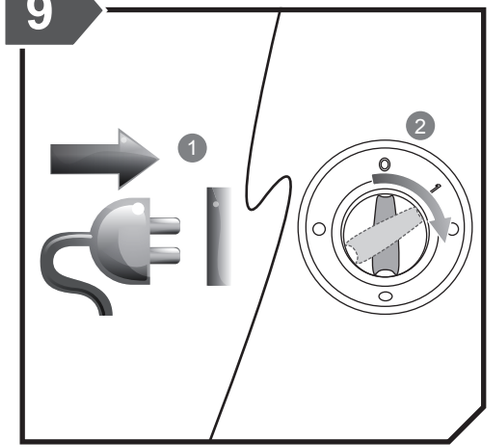

10

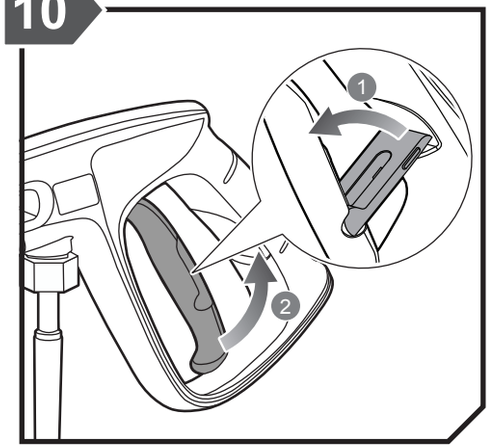

OVERVIEW

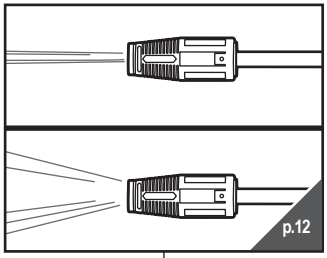

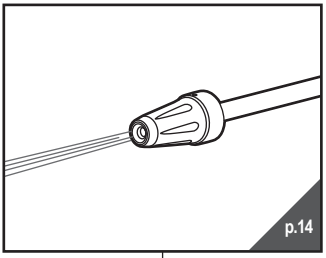

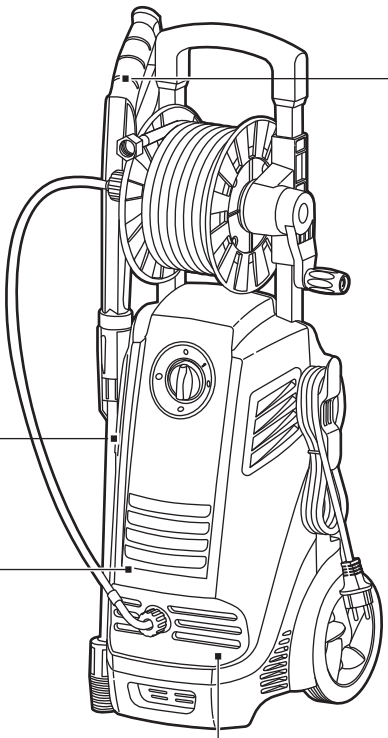

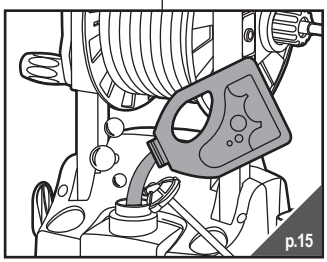

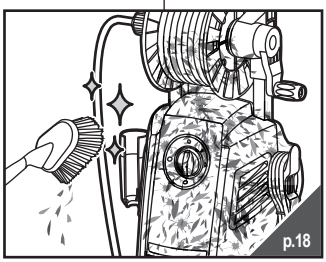

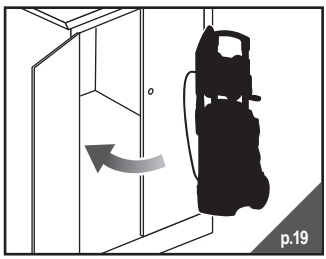

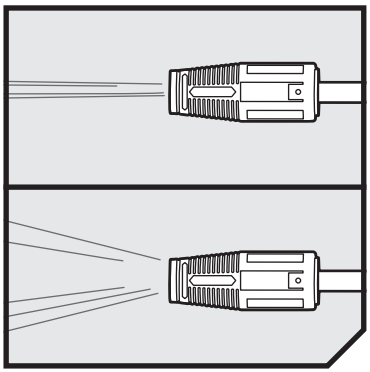

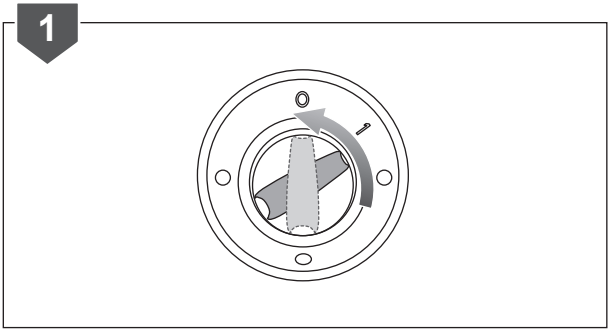
1

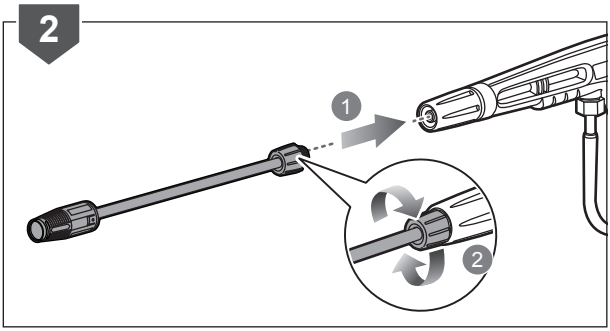
2
1
2

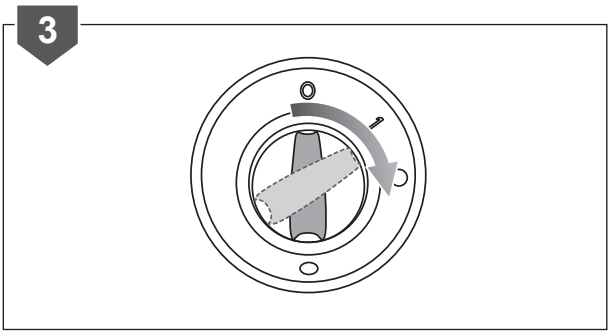
3

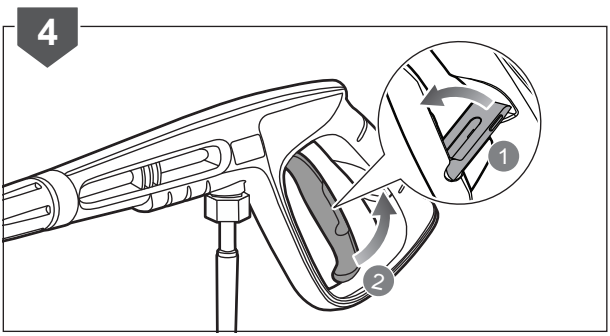
4
1
2

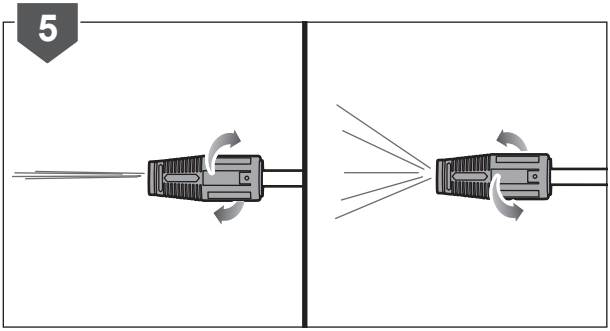
5

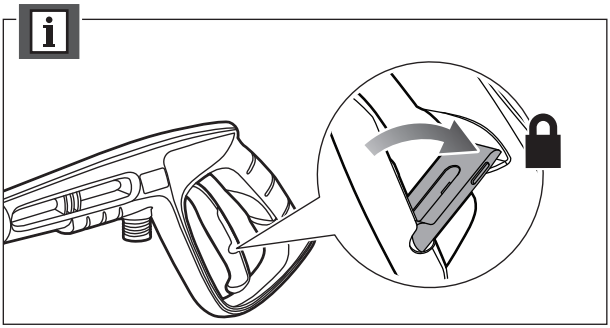

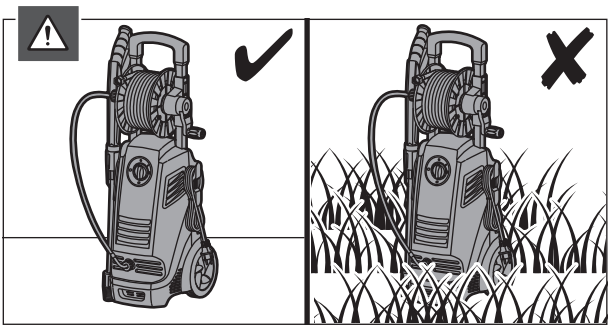

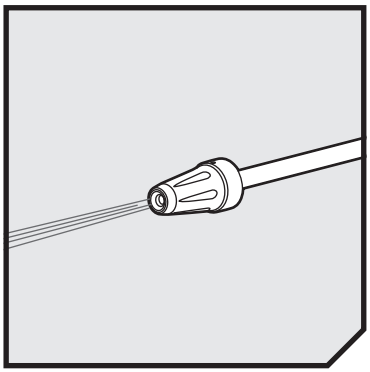

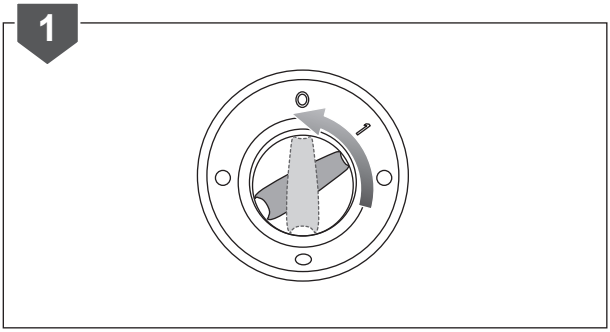
1

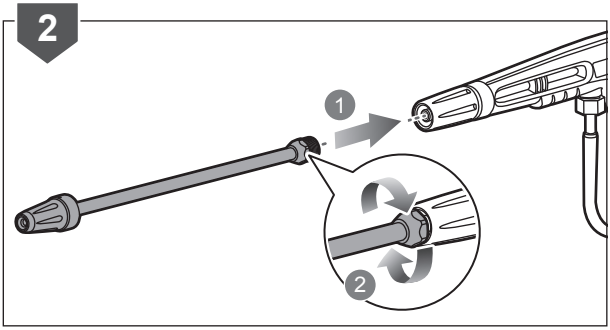
2
1
2

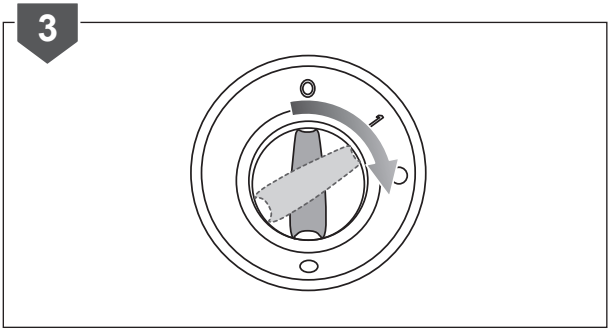
3

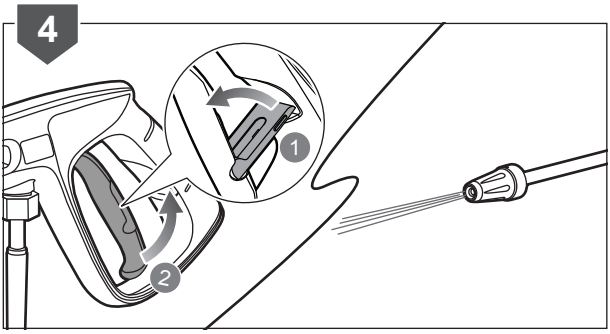
4
1
2

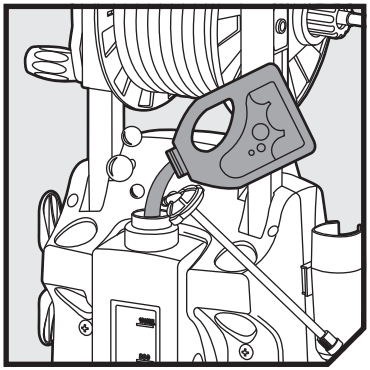

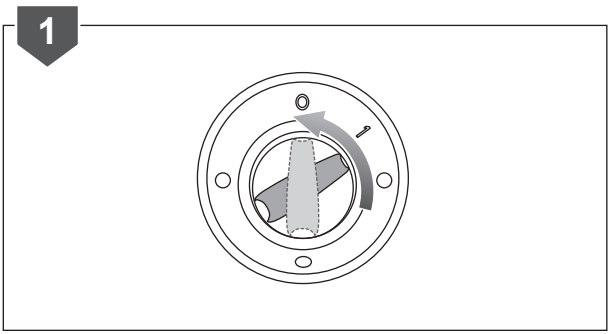
1
0
1

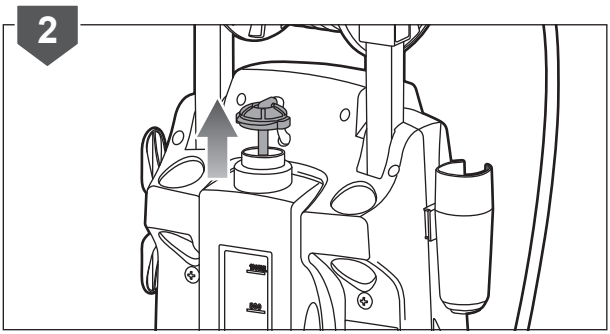
2


3

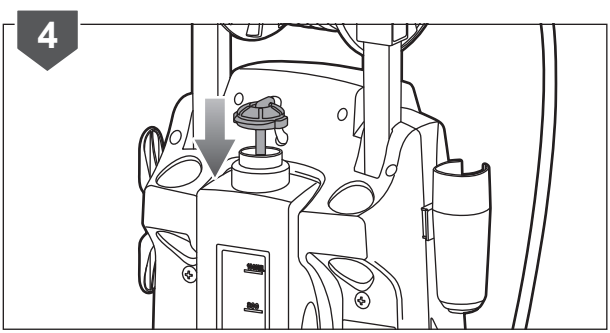
4

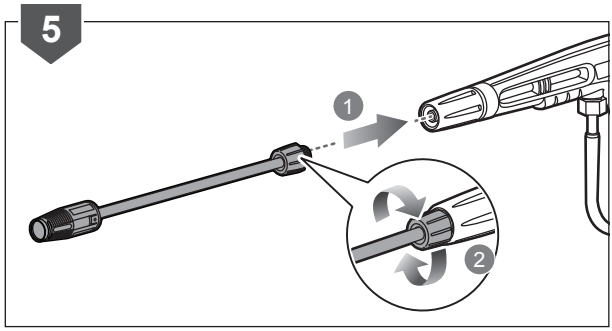
5
1
2

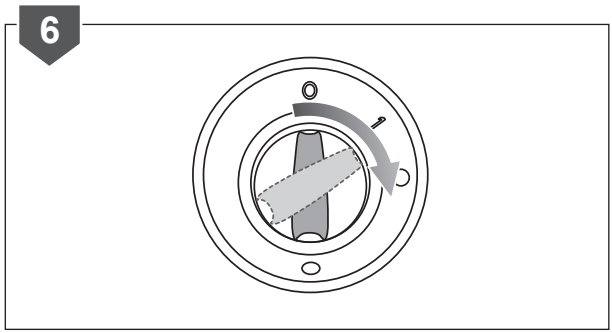
6

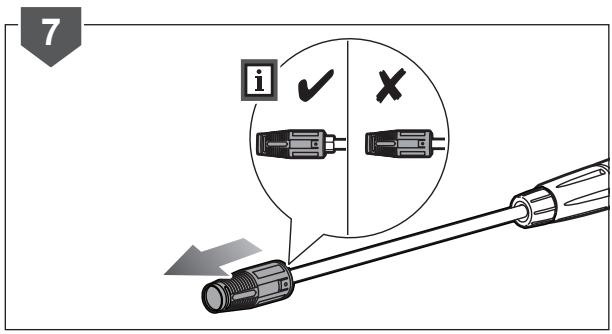
7

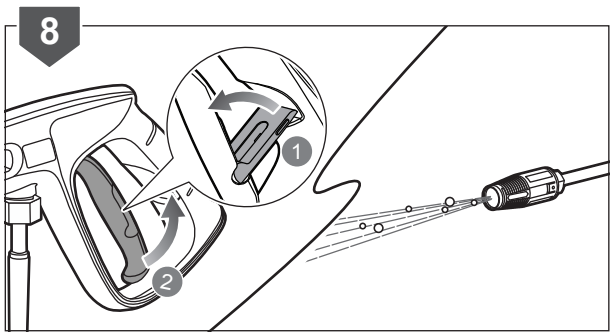
8
1
2

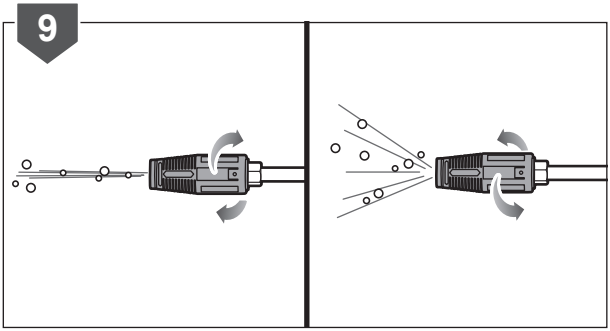
9

MAINTENANCE

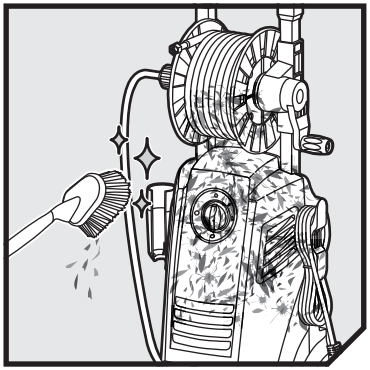

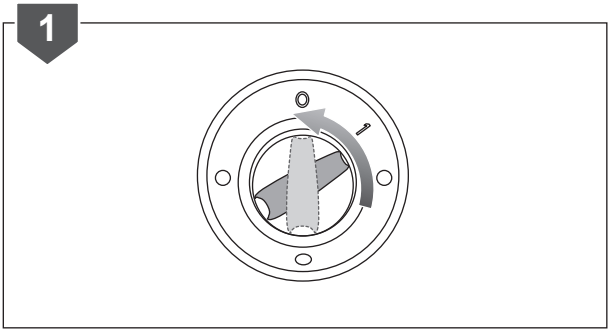

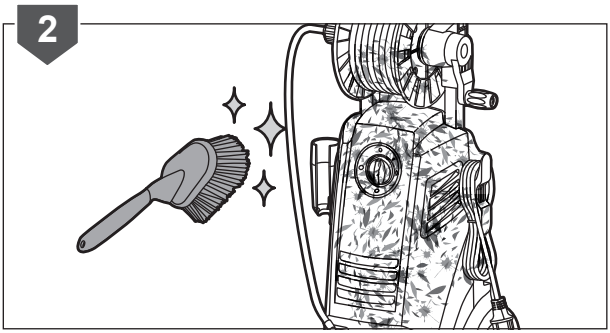

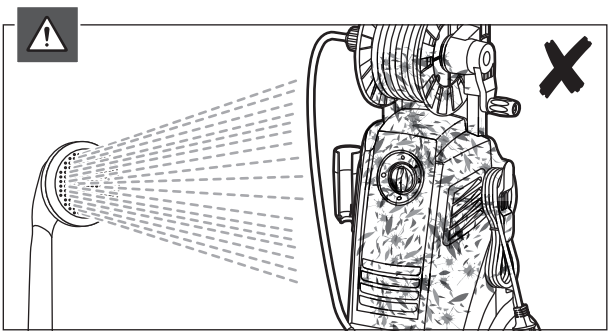

STORAGE

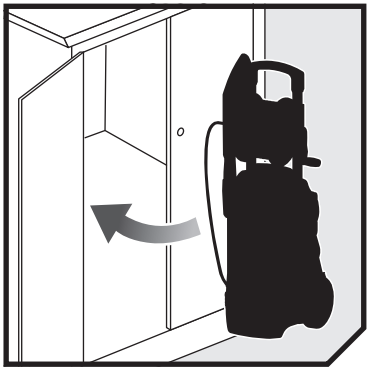

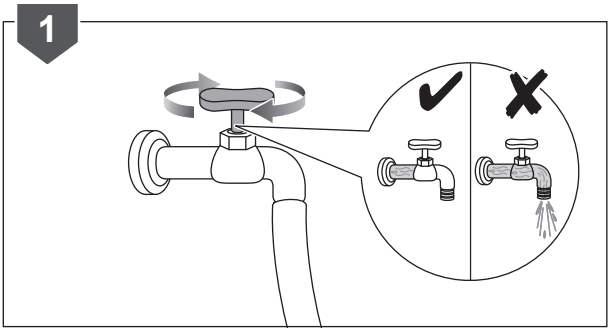

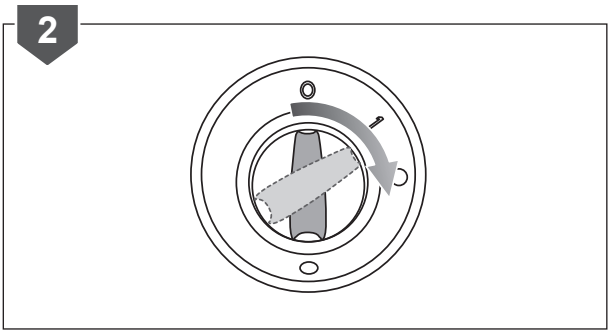

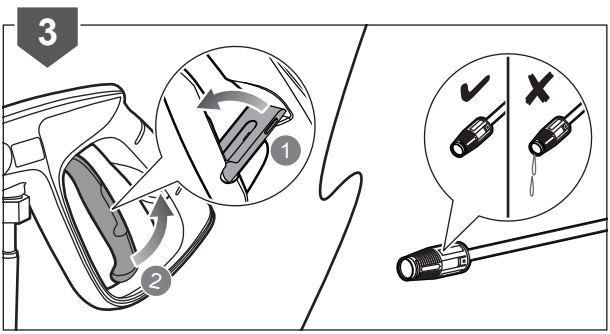

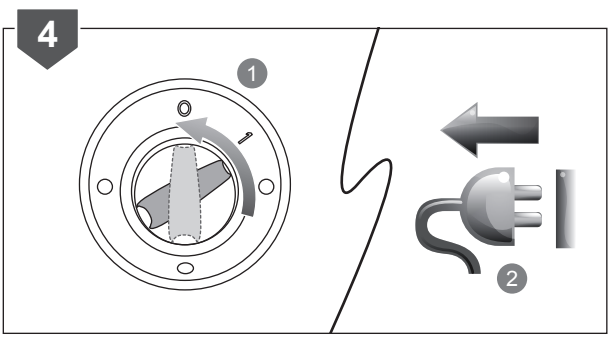

STORAGE

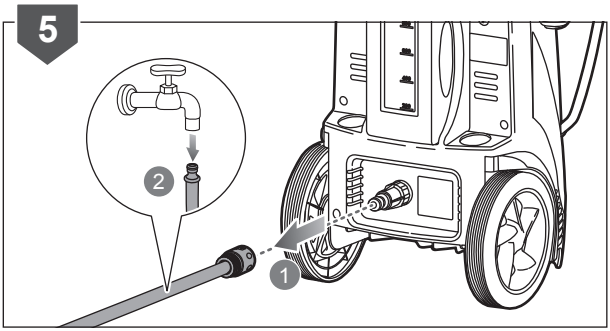

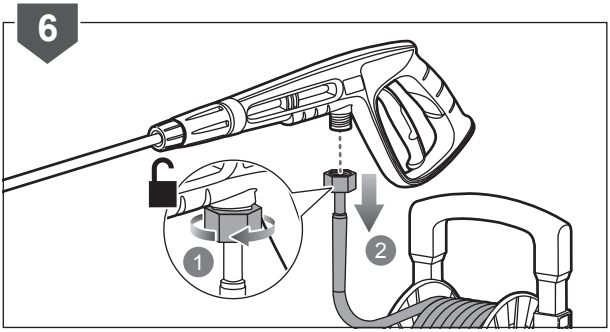

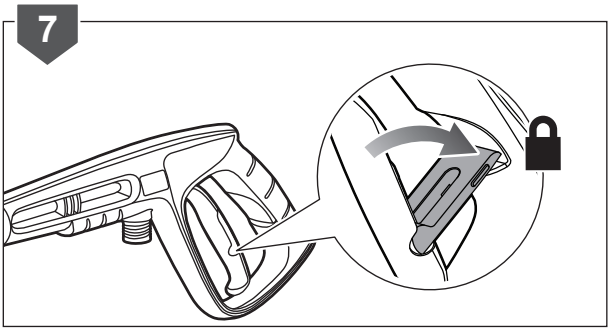

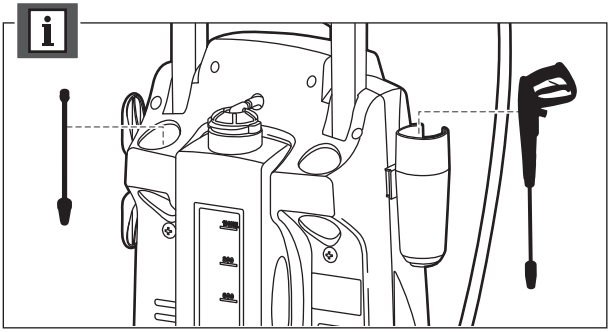

STORAGE

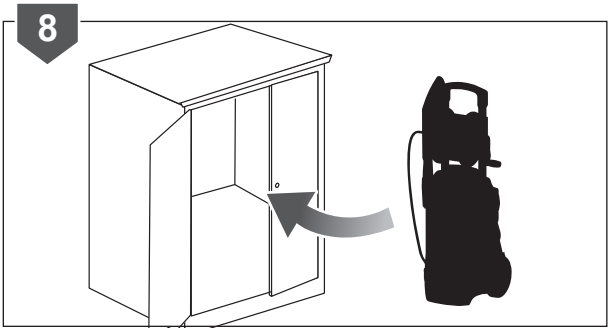

PRODUCT SPECIFICATIONS

Pressure washer	
Model	RPW170-G
Rated voltage	220-240V
Frequency	50 Hz
Power	2400W
Hose length	8m
Dilution ratio	10%
Maximum pressure	17 MPa (170Bar/2500PSI)
Rated pressure	13 MPa (130Bar/1900PSI)
Degree of protection	IPX5
Rated flow	7.33 L/min
Max. flow	7.8 L/min
Max. inlet water pressure	0.7 MPa
Detergent tank	1.2L
Power cord length	5m
Sound pressure level (L_{PA}) (in accordance with EN 60335-2-79)	82.3 db
Uncertainty	2.7 db
Sound power level (L_{WA}) (in accordance with EN 60335-2-79)	98.6 db
Uncertainty	2.7db
Vibration value (in accordance with EN 60335-2-79)	<2.5 ms^2
Weight	30.7kg



Imported by:

Techtronic Industries Australia Pty Ltd
31 Gilby Road, Mount Waverley, VIC 3149
Melbourne, Australia

Techtronic Industries N.Z. Limited
2 Landing Drive, Mangere
Auckland, 2022, New Zealand

099903022062-01